Smart Storage Monitoring: Monitor temperature, humidity, and other environmental factors in storage facilities to prevent spoilage and maintain quality.

Jasper Oliver D Rozario
Dept. of Computer Science Engineering
Independent University, Bangladesh
Dhaka, Bangladesh
2220841@iub.edu.bd

Kazi Samin Nawal
Dept. of Computer Science Engineering
Independent University, Bangladesh
Dhaka, Bangladesh
2220256@iub.edu.bd

Meraj Ahmed
Dept. of Computer Science Engineering
Independent University, Bangladesh
Dhaka, Bangladesh
2221557@iub.edu.bd

Komol Krishna Paul
Dept. of Computer Science Engineering
Independent University, Bangladesh
Dhaka, Bangladesh
2221337@iub.edu.bd

Shannidhay Ghosh
Dept. of Computer Science Engineering
Independent University, Bangladesh
Dhaka, Bangladesh
2221440@iub.edu.bd

***Abstract*—Smart environmental monitoring of temperature, humidity, and air quality is crucial for preserving product integrity in storage facilities. Improper storage conditions can lead to spoilage, financial losses, and compromised product quality. To address these issues, our study introduces a smart storage monitoring system integrating IoT sensors, cloud computing, and real-time analytics to maintain optimal environmental conditions. The system continuously measures temperature, humidity, and other critical parameters, transmitting data to a centralized platform for analysis. Additionally, it has predictive analytics for preventive maintenance, automated alert systems to notify the stakeholders about anomalies, and a user-friendly interface for remote monitoring. The paper further discusses scalability, cost-effectiveness, and the potential integration of artificial intelligence for enhanced predictive capabilities.**

***Keywords*—Smart storage monitoring, IoT, environmental monitoring, temperature control, humidity management, spoilage prevention, real-time analytics.**

I. Introduction

Ensuring optimal environmental conditions in storage facilities is essential for preserving the quality and preventing spoilage of perishable goods, especially agricultural produce like potatoes. Potatoes are highly sensitive to fluctuations in temperature, humidity, and air quality, which can trigger spoilage, sprouting, and microbial growth, leading to significant economic losses. According to recent studies, post-harvest losses due to improper storage conditions account for up to 30% of global agricultural produce waste [1],[2].

The integration of Internet of Things (IoT) technologies has emerged as a transformative approach to address these challenges by enabling real-time environmental monitoring in storage facilities. IoT-based systems allow for precise monitoring of parameters such as temperature, humidity, carbon dioxide (CO_2), and total volatile organic compounds (TVOCs) [3]. By combining advanced sensors, wireless connectivity, and cloud-based platforms, these systems provide stakeholders with actionable insights to prevent spoilage and maintain produce quality [4]. However, despite the advancements in IoT, there is still a need for practical, low-cost, and scalable solutions suitable for small and medium-scale storage environments, particularly in resource-limited settings [5].

This research presents a smart storage monitoring system designed to address these limitations. The system incorporates NTC thermistors, AHT10 temperature and humidity sensors, and ENS160 air quality sensors to monitor key environmental parameters. Data is processed using an ATmega2560 microcontroller integrated with an ESP8266 module, which facilitates wireless data transmission to a cloud-based platform. The system provides remote access to real-time environmental data via web and mobile applications, enabling proactive decision-making to maintain optimal storage conditions.

The motivation for this study stems from the global need to reduce post-harvest food losses and ensure food security. By implementing an affordable and scalable IoT-based smart storage system, this research contributes to minimizing storage-related losses, improving the quality of stored agricultural produce, and bridging the gap between conventional storage methods and modern technological solutions. This paper aims to demonstrate the effectiveness of the proposed system in monitoring storage conditions and ensuring long-term produce quality through continuous data-driven insights.

II. Related Work

The reviewed studies highlight significant advancements in leveraging IoT, sensors, and machine learning for food spoilage prevention and quality management across diverse storage environments. Innovative smart packaging solutions,

equipped with CO_2-sensitive films, RFID tags, and DNAzyme biosensors, allow real-time monitoring of spoilage indicators such as pH, gas emissions, and temperature within food packaging [1],2]. These technologies not only enhance food safety but also extend shelf life by enabling proactive interventions. In another study, CNN-based systems were employed for spoilage detection in fruits and vegetables, integrating high-resolution image classification with environmental data from gas and temperature sensors. These systems achieved high predictive accuracy[3],[9],15]. For grain storage, hermetic technologies like PICS bags, metal silos, and airtight containers outperformed traditional storage methods, significantly reducing pest infestations and moisture-related spoilage [4]. Studies on temperature and humidity monitoring in cold storage environments utilized Arduino-based systems with DHT11 sensors, demonstrating reliable real-time environmental stability [5]. A case study evaluating storage structures in local markets revealed significant advantages of IoT-enabled monitoring for reducing post-harvest losses in fruits and vegetables [7].Cold storage systems integrated with IoT platforms like ZigBee and Wi-Fi modules allowed remote monitoring of fruits and vegetables, further minimizing spoilage [8].In rural areas, the high cost and limited availability of hermetic storage materials hinder adoption despite their efficacy [6]. Studies on e-Nose systems further validated the applicability of VOC-based detection models, with machine learning approaches achieving high spoilage prediction accuracy [10]. IoT-enabled systems were applied to smart cold storage warehouses, where they achieved efficient monitoring of environmental parameters, improving the cold chain [13]. Intelligent transportation monitoring for supply chains used IoT sensor networks to ensure stable conditions for fruits and vegetables during transit [8] . Research on big data and cloud-based systems showed how data analytics can enhance food quality management at scale [18].Another study demonstrated spectroscopic techniques paired with machine learning models for monitoring spoilage indicators in grains . Smart sensing technologies were also integrated into active food packaging, offering multifunctional solutions that improve safety and waste management [12]

III. Problem Statement

One of the most important issues in food storing is minimizing the loss and preserving the quality of perishable items, such as grains, fruits, and vegetables. The main environmental factors that prevent spoiling, such as temperature, humidity, and gas emissions, are typically impossible to monitor or regulate using traditional storage techniques. Significant financial losses and a decline in food safety are the outcomes of this. Despite their limitations in terms of cost, scalability, and real-time monitoring, cold storage and hermetic packaging are viable alternatives.

IoT, artificial intelligence, and sensor systems have all advanced, but their integration into storage environments has been unequal. Sensor instability, the inability to adjust to various storage conditions, and the expensive infrastructure needed for real-time monitoring and prediction are problems with the majority of existing systems.

An intelligent, scalable, and reasonably priced smart storage monitoring system is required to address these problems. IoT-based sensors should be used in this system to track environmental variables in real time, and AI-driven analytics should be used to proactively anticipate and stop spoiling. This kind of solution can guarantee the constant quality of stored items at different supply chain stages, increase the effectiveness of storage facilities, and decrease food waste.

IV. Methodology

A. An overview

The proposed methodology focuses on developing a smart storage monitoring system to track critical environmental parameters such as temperature, humidity, air quality, and gas emissions within a controlled storage environment. Fig. 1 shows a block diagram that explains the functionality of the device.

The system is designed to monitor a cargo box (50L–80L) containing potatoes, aiming to prevent spoilage and maintain quality during storage.The core processing unit is the MEGA+WiFi R3 ATmega2560+ESP8266, which collects data from all sensors and transmits it wirelessly to a cloud-based monitoring platform. This allows real-time remote access and data visualization.

The setup integrates multiple sensors and components for real-time data collection and monitoring. NTC Thermistor is deployed for precise temperature measurements, ensuring the storage environment stays within the optimal temperature range for potatoes. The AHT10 sensors are used to monitor humidity levels, as maintaining proper relative humidity is crucial for preventing dehydration and decay. Air quality is monitored using the ENS160 AHT21 sensor, which tracks carbon dioxide (CO_2) , and total volatile organic compounds (TVOCs), providing insights into gas buildup and spoilage indicators.

Thin silicon wires are used for sensor connections, while heat shrink tubes are utilized to insulate and secure the wiring, ensuring durability and safety.

The sensors and electronics are installed in a cargo box, replicating a storage environment. The data collected is analyzed to identify trends and detect conditions that could lead to spoilage, providing an efficient and cost-effective solution for monitoring and maintaining optimal storage conditions for perishable produce.

B. Schematic Design

Schematic design is shown in Fig. 2 to illustrate the relationships between different parts and how they work together.

A set of NTC thermistors (10K) is employed to measure temperature at multiple points within the storage environment. These thermistors are connected in a voltage divider configuration with 10K resistors, allowing analog temperature readings through the Arduino's analog input pins (A0 to

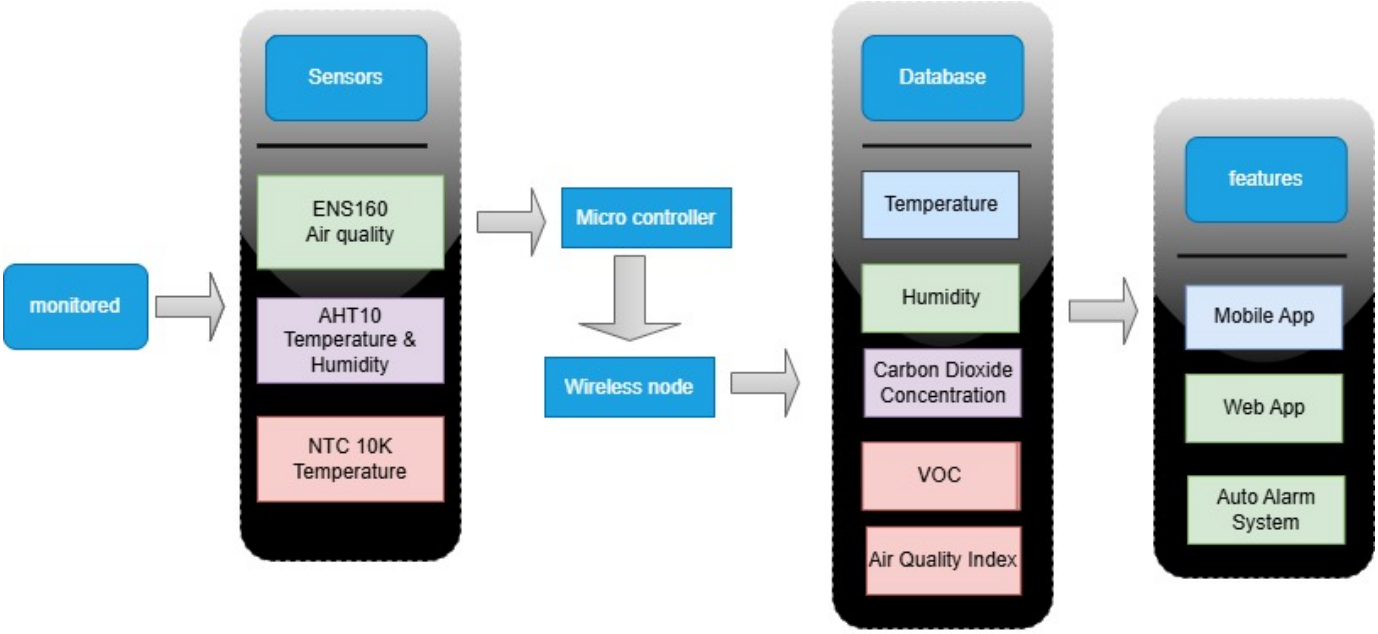

Fig. 1. Block diagram of the proposed system.

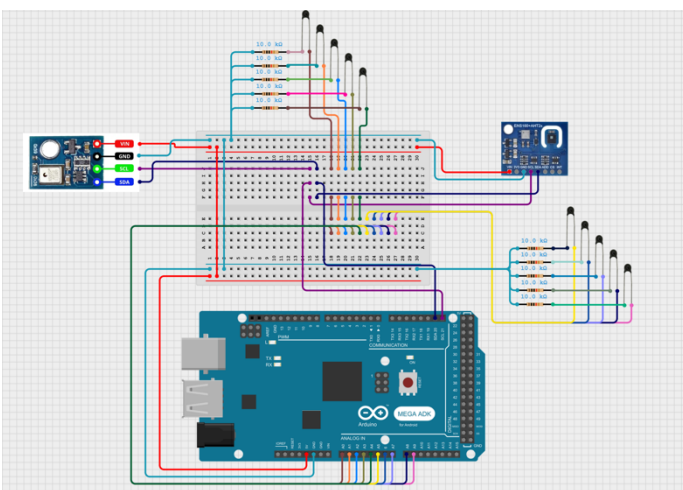

Fig. 2. Circuit diagram of the system

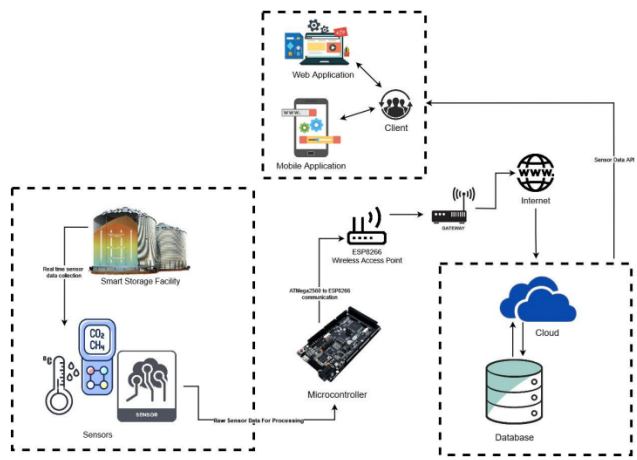

Fig. 3. System architecture

A9). The thermistor array ensures comprehensive temperature monitoring across the storage area.

In addition to temperature tracking, the AHT10 sensor is integrated to measure humidity and temperature. It is connected to the Arduino via the I2C communication protocol using the SCL (Serial Clock) and SDA (Serial Data) pins, enabling precise and reliable environmental data acquisition.

The system also incorporates the ENS160 sensor, designed to monitor air quality parameters such as CO_2 and TVOC (total volatile organic compounds). Like the AHT10, the ENS160 communicates with the Arduino using the I2C protocol, ensuring real-time gas detection and air quality analysis. This integration allows for continuous monitoring of spoilage indicators, critical for perishable goods like potatoes.

All sensors are wired to a breadboard for efficient signal distribution and stability. Power (VCC) and ground (GND) connections are managed carefully to maintain reliable sensor operation. Thin silicon wires and heat shrink tubes are used for organized wiring, ensuring insulation and safety. The overall system is designed to collect and transmit data seamlessly, enabling smart storage monitoring to maintain the quality and shelf-life of stored produce.

C. System Architecture

The system consists of four primary components: sensors, the microcontroller, cloud integration, and the user interface. At the core of the system, various sensors are deployed within

the smart storage facility to continuously measure and collect environmental data. These sensors include temperature sensors (NTC thermistors), humidity sensors (AHT10), and air quality sensors (ENS160), which monitor CO_2 , and TVOC levels. The sensors gather real-time data, which is then sent to the microcontroller for processing.

The microcontroller, a MEGA+WiFi R3 (ATmega2560 + ESP8266) combination, serves as the central processing unit for the system. It receives the raw data from the sensors, processes it, and communicates the information to the cloud. The ESP8266 module enables wireless communication between the microcontroller and the internet, serving as the gateway to transmit the data to the cloud platform. The microcontroller

ensures the data is appropriately formatted before sending it to the cloud for further processing and storage.

Once the data reaches the cloud, it is stored in a cloud database, where it is managed and made accessible through APIs. This cloud platform ensures data synchronization across the system, offering reliability and scalability. By hosting the data in the cloud, it can be accessed remotely from anywhere, providing real-time insights into the storage facility's environmental conditions.

The final component of the architecture is the user interface, which includes both web and mobile applications. Clients can use these applications to interact with the system and monitor the environmental parameters in real-time. The applications connect to the cloud via the sensor data API, retrieving the latest sensor information and presenting it through user-friendly dashboards. Alerts and notifications can be triggered if any environmental parameter goes beyond predefined thresholds, allowing users to take timely action and prevent spoilage or damage to the stored items. The entire system architecture of the proposed system is displayed in Fig. 3. The hardware setup with all connected components is shown in Figure 5.

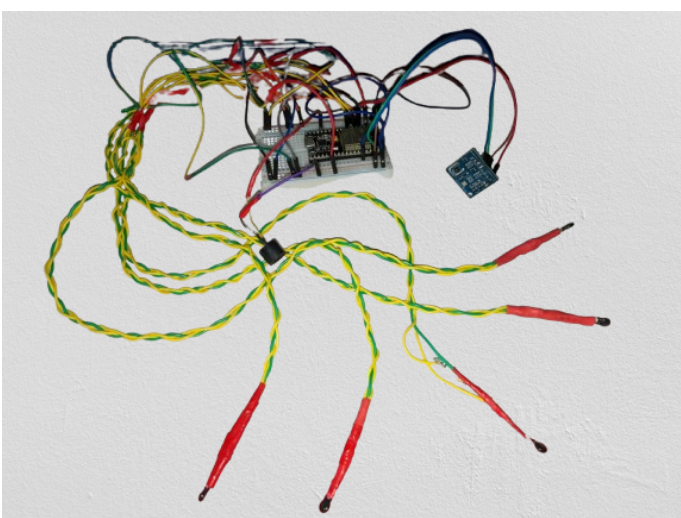

Fig. 4. The Hardware Implementation of the system

V. Result Analysis

The Smart Storage Monitoring System implemented in this study demonstrates significant advantages in maintaining the quality and preventing spoilage of perishable goods. The results, as summarized in Table I, highlight the system's capability to monitor and regulate critical environmental parameters effectively. The parameter values are monitored and recorded over time.

TABLE I
Sensor Data Summary

Parameter	Value
Room Temperature (°C)	25.96, 26.02, 26.04, 26.14, 25.78
TVOC	318, 342, 312, 328, 341
Humidity (%)	73.15, 73.18, 73.16, 73.19, 73.00
Average NTC Temperature (°C)	27.05, 27.10, 27.14, 27.24, 27.02

The dashboard design emphasizes user-friendly, at-a-glance monitoring, enabling prompt decision-making and ensuring consistent storage conditions for perishable goods. This real-time visualization capability reinforces the system's reliability and effectiveness in addressing the challenges of food storage and quality preservation.

Fig. 5. Real-time data obtained from the device, displayed in the web app

In summary, the Smart Storage Monitoring System offers a practical, scalable, and sustainable solution for preserving the quality of perishable goods, demonstrating its potential to address global challenges in food storage and security.

VI. Challenges Faced

The development and implementation of the Smart Storage Monitoring System encountered several challenges:

- **Sensor Calibration and Accuracy:** Ensuring the accurate calibration of sensors like NTC thermistors and AHT10 for precise environmental monitoring required meticulous testing. Variations in sensor readings due to environmental factors posed additional challenges, necessitating robust calibration protocols.

- **Data Transmission Reliability:** The wireless communication module (ESP8266) occasionally experienced connectivity issues, particularly in environments with weak Wi-Fi signals. This impacted real-time data transmission and necessitated optimizing the network setup.
- **Power Management:** Maintaining consistent power supply to the sensors and microcontroller in varied operational settings required careful planning. Incorporating automatic power shutdown features to conserve energy added complexity to the design.
- **Scalability Constraints:** While the system was designed for small to medium-scale storage facilities, adapting it for larger-scale operations presented challenges in terms of sensor coverage, data processing, and cost.
- **Environmental Variability:** The system's performance needed to be tested under diverse environmental conditions to ensure reliability. Variability in temperature, humidity, and air quality across different storage scenarios required extensive field testing and system optimization.

Despite these challenges, the system's successful implementation highlights its robustness and adaptability, paving the way for future enhancements and broader applications.

VII. Conclusion

The Smart Storage Monitoring System presented in this paper provides an efficient and reliable solution for monitoring environmental conditions within storage facilities. By leveraging IoT-based technologies, including temperature, humidity, and air quality sensors integrated with a microcontroller and cloud-based data storage, the system ensures real-time tracking of critical parameters such as temperature fluctuations, humidity levels, and CO_2 concentrations. The seamless communication between sensors, the microcontroller, and the cloud allows for timely data analysis and remote accessibility through user-friendly web and mobile applications.

The system addresses key challenges associated with spoilage and quality degradation in storage environments, offering proactive monitoring and alert mechanisms to ensure optimal conditions. This implementation not only reduces potential losses but also improves operational efficiency for storage management. Furthermore, the modular and scalable architecture allows for the adaptation of the system to different storage scenarios and commodities, making it a versatile and cost-effective solution.

Overall, this research demonstrates how smart technologies can enhance storage monitoring, ensuring the preservation of perishable goods, such as potatoes, while reducing waste. Future work can focus on expanding the system's capabilities, such as integrating advanced predictive analytics and automation, to further optimize environmental control and enhance its practical applications.

TABLE II
A comparison of the suggested system in relation to currently offered industrial goodss

Feature	**Proposed Smart Storage System**	**Libelium Smart Agriculture Sensors**	**Sensaphone Remote Monitoring Systems**
Approximate Cost (USD)	100 - 300	300 - 500	500 - 1000
Latency	Low	Moderate	Moderate
Temperature Detection	Yes (AHT10 & NTC10k)	Yes	Yes
Humidity Detection	Yes (AHT10)	No	No
Air Quality Detection (CO2, VOC)	Yes (ENS160)	No	No
Gas Detection (CO, LPG, Smoke)	Yes (ENS160)	No	Yes
Motion Detection	No	No	No
Remote Monitoring via Mobile App	Yes	No	Yes
Scalable	Yes	Limited	Limited
Circular Wireless Node Topology	Yes	No	No
Automatic Power Shutdown	Yes	No	No
Suitable for Industries	Yes	Yes	Yes

References

[1] Yousefi, Hanie & Su, Hsuan-Ming & M. Imani, Sara & Al-Khaldi, Kais & Filipe, Carlos & Didar, Tohid. (2019). Intelligent Food Packaging: A Review of Smart Sensing Technologies for Monitoring Food Quality. ACS Sensors. 4. 10.1021/acssensors.9b00440.

[2] Dodero, Andrea & Escher, Andrea & Bertucci, Simone & Castellano, Maila & Lova, Paola. (2021). Intelligent Packaging for Real-Time Monitoring of Food-Quality: Current and Future Developments. Applied Sciences. 11. 3532. 10.3390/app11083532.

[3] Sonwani, Ekta & Bansal, Urvashi & Alroobaea, Roobaea & Baqasah, Abdullah & Hedabou, Mustapha. (2022). An Artificial Intelligence Approach Toward Food Spoilage Detection and Analysis. Frontiers in Public Health. 9. 10.3389/fpubh.2021.816226.

[4] Manandhar, Ashish & Milindi, Paschal & Shah, Ajay. (2018). An Overview of the Post-Harvest Grain Storage Practices of Smallholder Farmers in Developing Countries. Agriculture. 8. 57. 10.3390/agriculture8040057.

[5] Xiuying Tang et al 2020 J. Phys.: Conf. Ser. 1601 062010 DOI 10.1088/1742-6596/1601/6/062010

[6] Angelovič, Marek & Jobbágy, Ján & Findura, Pavol & Fiantoková, Soňa. (2015). THE EFFECT OF CONDITIONS AND STORAGE TIME ON COURSE OF MOISTURE AND TEMPERATURE OF MAIZE GRAINS. Savremena poljoprivredna tehnika. 41. 1-8. 10.5937/SavPoljTeh1501001A.

[7] Omobowale, Mobolaji. (2021). Evaluation of market-level storage structures and postharvest losses of selected fruits and vegetables: A case study of five markets in Ibadan. 9. 198 - 211. 10.33495/jacr_v9i8.21.151.

[8] Kumar, Saureng. (2024). Intelligent Transportation Storage Condition Assessment System For Fruits and Vegetables Supply Chain Using Internet of Things Enabled Sensor Network. 10.21203/rs.3.rs-3933246/v1.

[9] Melesse, Tsega Yenew & Bollo, Matteo & Di Pasquale, Valentina &

Centro, Francesco & Riemma, Stefano. (2022). Machine Learning-Based Digital Twin for Monitoring Fruit Quality Evolution. Procedia Computer Science. 200. 13-20. 10.1016/j.procs.2022.01.200.

[10] Lin, H., Wei, Z., Chen, C., Huang, Y., & Zhu, J. (2024). Early Identification of Rotten Potatoes Using an Electronic Nose Based on Feature Discretization and Ensemble Convolutional Neural Network. Sensors, 24(10), 3105. https://doi.org/10.3390/s24103105

[11] Akila, A. & Shalini, P.. (2018). Food grain storage management system. International Journal of Engineering and Technology(UAE). 7. 170-173. 10.14419/ijet.v7i2.31.13433.

[12] Pal, Amitangshu & Kant, Krishna. (2020). Smart Sensing, Communication, and Control in Perishable Food Supply Chain. ACM Transactions on Sensor Networks (TOSN). 16. 1-41. 10.1145/3360726.

[13] Xie, Yulai & Muniswamy-Reddy, Kiran-Kumar & Feng, Dan & Li, Yan & Long, Darrell. (2013). Evaluation of a Hybrid Approach for Efficient Provenance Storage. ACM Transactions on Storage (TOS). 9. 10.1145/2501986.

[14] Mohammed, Maged & Riad, Khaled & Khalid Alqahtani, Nashi. (2022). Design of a Smart IoT-Based Control System for Remotely Managing Cold Storage Facilities. Sensors. 22. 4680. 10.3390/s22134680.

[15] Mercol, J.P., Gambini, M.J., & Santos, J.M. (2008). Automatic classification of oranges using image processing and data mining techniques.

[16] Fazio, Maria & Celesti, Antonio & Puliafito, Antonio & Villari, Massimo. (2015). Big Data Storage in the Cloud for Smart Environment Monitoring. Procedia Computer Science. 52. 500-506. 10.1016/j.procs.2015.05.023.

[17] Plasquy, Eddy & Sola-Guirado, Rafael & Florido, María C. & García, José & García Martín, Juan. (2021). Cold Storage and Temperature Management of Olive Fruit: The Impact on Fruit Physiology and Olive Oil Quality—A Review. Processes. 9. 1543. 10.3390/pr9091543.

[18] Omokaro, Idama & Ekruyota, Ovuakporaye. (2023). Design and Development of a Model Smart Storage System. Turkish Journal of Agricultural Engineering Research. 4. 10.46592/turkager.1297511.

[19] Ullo, Silvia & Sinha, Professor G. (2020). Advances in Smart Environment Monitoring Systems Using IoT and Sensors. Sensors. 20. 3113. 10.3390/s20113113.